CHAPTER 10

MECHANICAL SEPARATIONS

Mechanical separations can be divided into four groups - sedimentation, centrifugal separation, filtration and sieving.

In sedimentation, two immiscible liquids, or a liquid and a solid, differing in density, are separated by allowing them to come to equilibrium under the action of gravity, the heavier material falling with respect to the lighter. This may be a slow process. It is often speeded up by applying centrifugal forces to increase the rate of sedimentation; this is called centrifugal separation. Filtration is the separation of solids from liquids, by causing the mixture to flow through fine pores which are small enough to stop the solid particles but large enough to allow the liquid to pass. Sieving, that is interposing a barrier through which the larger elements cannot pass, is often used for classification of solid particles.

Mechanical separation of particles from a fluid uses forces acting on these particles. The forces can be direct restraining forces such as in sieving and filtration, or indirect as in impingement filters. They can come from gravitational or centrifugal action, which can be thought of as negative restraining forces, moving the particles relative to the containing fluid. So the separating action depends on the character of the particle being separated and the forces on the particle which cause the separation. The important characteristics of the particles are size, shape and density; and of the fluid are viscosity and density. The reactions of the different components to the forces set up relative motion between the fluid and the particles, and between particles of different character. Under these relative motions, particles and fluids accumulate in different regions and can be gathered as in:

- the filter cake and the filtrate tank in the filter press;
- the discharge valve in the base of the cyclone and the air outlet at the top;
- the outlet streams of a centrifuge;
- on the various sized sieves of a sieve set.

In the mechanical separations studied, the forces considered are gravity, combinations of gravity with other forces, centrifugal forces, pressure forces in which the fluid is forced away from the particles, and finally total restraint of solid particles where normally the fluid is of little consequence. The velocities of particles moving in a fluid are important for several of these separations.

THE VELOCITY OF PARTICLES MOVING IN A FLUID

Under a constant force, for example the force of gravity, particles in a liquid accelerate for a time and thereafter move at a uniform velocity. This maximum velocity which they reach is called their terminal velocity. The terminal velocity depends upon the size, density and shape of the particles, and upon the properties of the fluid.

When a particle moves steadily through a fluid, there are two principal forces acting upon it, the external force causing the motion and the drag force resisting motion which arises from frictional action of the fluid. The net external force on the moving particle is applied force

less the reaction force exerted on the particle by the surrounding fluid, which is also subject to the applied force, so that

$$F_s = Va\,(\rho_p - \rho_f)$$

where F_s is the net external accelerating force on the particle, V is the volume of the particle, a is the acceleration which results from the external force, ρ_p is the density of the particle and ρ_f is the density of the fluid.

The drag force on the particle (F_d) is obtained by multiplying the velocity pressure of the flowing fluid by the projected area of the particle

$$F_d = C\rho_f v^2 A/2$$

where C is the coefficient known as the *drag coefficient*, ρ_f *is* the density of the fluid, v is the velocity of the particle and A the projected area of the particle at right angles to the direction of the motion.

If these forces are acting on a spherical particle so that $V = \pi D^3/6$ and $A = \pi D^2/4$, where D is the diameter of the particle, then equating F_s and F_d, in which case the velocity v becomes the terminal velocity v_m**,** we have:

$$(\pi D^3/6) \times a\,(\rho_p - \rho_f) = C\rho_f v_m^2\,\pi D^2/8$$

It has been found, theoretically, that for the streamline motion of spheres, the coefficient of drag is given by the relationship:

$$C = 24/(\mathrm{Re}) = 24\mu\,/D v_m \rho_f$$

Substituting this value for C and rearranging, we arrive at the equation for the terminal velocity

$$v_m = D^2 a(\rho_p - \rho_f)\,/18\mu \qquad (10.1)$$

This is the fundamental equation for movement of particles in fluids.

SEDIMENTATION

Sedimentation uses gravitational forces to separate particulate material from fluid streams. The particles are usually solid, but they can be small liquid droplets, and the fluid can be either a liquid or a gas. Sedimentation is very often used in the food industry for separating dirt and debris from incoming raw material, crystals from their mother liquor and dust or product particles from air streams.

In sedimentation, particles are falling from rest under the force of gravity. Therefore in sedimentation, eqn. (10.1) takes the familiar form of **Stokes' Law**:

$$v_m = D^2 g(\rho_p - \rho_f)/18\mu \qquad (10.2)$$

Note that eqn. (10.2) is not dimensionless and so consistent units must be employed throughout. For example in the SI system, D in m, g in ms^{-2}, ρ in kgm^{-3} and μ in Nsm^{-2}, and then v_m would be in ms^{-1}. Particle diameters are usually very small and are often measured in microns (micro-metres) = 10^{-6}m with the symbol μm.

Stoke's Law applies only in streamline flow and strictly only to spherical particles. In the case of spheres, the criterion for streamline flow is that (Re) ≤ 2, and many practical cases occur in the region of streamline flow, or at least where streamline flow is a reasonable approximation. Where higher values of the Reynolds number are encountered, more detailed references should be sought, such as Henderson and Perry (1955), Perry (1997) and Coulson and Richardson (1978).

EXAMPLE 10.1. Settling velocity of dust particles
Calculate the settling velocity of dust particles of (a) 60μm and (b) 10μm diameter in air at 21°C and 100kPa pressure. Assume that the particles are spherical and of density $1280kgm^3$, and that the viscosity of air = 1.8×10^{-5} Ns m^{-2} and density of air = $1.2kgm^{-3}$.

(a) For 60μm particle:

$$v_m = \frac{(60 \times 10^{-6})^2 \times 9.81 \times (1280 - 1.2)}{(18 \times 1.8 \times 10^{-5})}$$
$$= \underline{0.14ms^{-1}}$$

(b) For 10μm particles since v_m is proportional to the squares of the diameters,

$$v_m = 0.14 \times (10/60)^2$$
$$= \underline{3.9 \times 10^{-3}ms^{-1}}$$

Checking the Reynolds number for the 60μm particles,

$$(Re) = (Dv\rho_f/\mu)$$
$$= (60 \times 10^{-6} \times 0.14 \times 1.2) / (1.8 \times 10^{-5})$$
$$= \underline{0.56}$$

Stokes' Law applies only to cases in which settling is free, that is where the motion of one particle is unaffected by the motion of other particles.

Where particles are in concentrated suspensions, an appreciable upward motion of the fluid accompanies the motion of particles downward. So the particles interfere with the flow patterns round one another as they fall. Stokes' Law predicts velocities proportional to the square of the particle diameters. In concentrated suspensions, it is found that all particles appear to settle at a uniform velocity once a sufficiently high level of concentration has been reached. Where the size range of the particles is not much greater than 10:1, all the particles tend to settle at the same rate. This rate lies between the rates that would be expected from Stokes' Law for the largest and for the smallest particles. In practical cases, in which Stoke's Law or simple extensions of it cannot be applied, probably the only satisfactory method of obtaining settling rates is by experiment.

Gravitational Sedimentation of Particles in a Liquid

Solids will settle in a liquid whose density is less than their own. At low concentration, Stokes' Law will apply but in many practical instances the concentrations are too high.

In a cylinder in which a uniform suspension is allowed to settle, various quite well defined zones appear as the settling proceeds. At the top is a zone of clear liquid. Below this is a zone of more or less constant composition, constant because of the uniform settling velocity of all sizes of particles. At the bottom of the cylinder is a zone of sediment with the larger particles further down. If the size range of the particles is wide, the zone of constant composition near the top will not occur and an extended zone of variable composition will replace it.

In a continuous thickener, with settling proceeding as the material flows through, and in which clarified liquid is being taken from the top and sludge from the bottom, these same zones occur. The minimum area necessary for a continuous thickener can be calculated by equating the rate of sedimentation in a particular zone to the counter flow velocity of the rising fluid. In this case we have:

$$v_u = (F - L)(dw/dt)/A\rho$$

where v_u is the upward velocity of the flow of the liquid, F is the mass ratio of liquid to solid in the feed, L is the mass ratio of liquid to solid in the underflow liquid, dw/dt is the mass rate of feed of the solids, ρ is the density of the liquid and A is the settling area in the tank.

If the settling velocity of the particles is v, then $v_u = v$ and, therefore:

$$A = (F - L)(dw/dt)/v\rho \qquad (10.3)$$

The same analysis applies to particles (droplets) of an immiscible liquid as to solid particles. Motion between particles and fluid is relative, and some particles may in fact rise.

EXAMPLE 10.2. Separating of oil and water
A continuous separating tank is to be designed to follow after a water washing plant for liquid oil. Estimate the necessary area for the tank if the oil, on leaving the washer, is in the form of globules 5.1×10^{-5}m diameter, the feed concentration is 4kg water to 1kg oil, and the leaving water is effectively oil free. The feed rate is 1000kgh^{-1}, the density of the oil is 894kgm^{-3} and the temperature of the oil and of the water is 38°C. Assume Stokes' Law.

From Appendix 6
Viscosity of water $= 0.7 \times 10^{-3}$Nsm^{-2}
Density of water at 38^{0}C $= 992$ kgm^{-3}

Diameter of globules $= 5.1 \times 10^{-5}$m

From eqn. (10.2) $v_m = D^2 g(\rho_p - \rho_f)/18\mu$

$V_m = (5.1 \times 10^{-5})^2 \times 9.81 \times (992 - 894)/(18 \times 0.7 \times 10^{-3})$
$= 1.98 \times 10^{-4}$ms^{-1}
$= 0.71$ mh^{-1}

and since F = 4 and L = 0, and dw/dt = flow of minor component = 1000/5 = 200 kg h^{-1}, we have from eqn. (10.3)

$$A = (F - L)(dw/dt)/v\rho$$
$$A = 4 \times 200/(0.71 \times 1000)$$
$$= \underline{1.1 m^2}$$

Sedimentation equipment for separation of solid particles from liquids by gravitational sedimentation is designed to provide sufficient time for the sedimentation to occur and to permit the overflow and the sediment to be removed without disturbing the separation. Continuous flow through the equipment is generally desired, so the flow velocities have to be low enough to avoid disturbing the sediment. Various shaped vessels are used, with a sufficient cross-section to keep the velocities down and fitted with slow speed, scraper conveyors and pumps to remove the settled solids. When vertical cylindrical tanks are used, the scrapers generally rotate about an axis in the centre of the tank and the overflow may be over a weir round the periphery of the tank, as shown diagrammatically in Fig. 10.1.

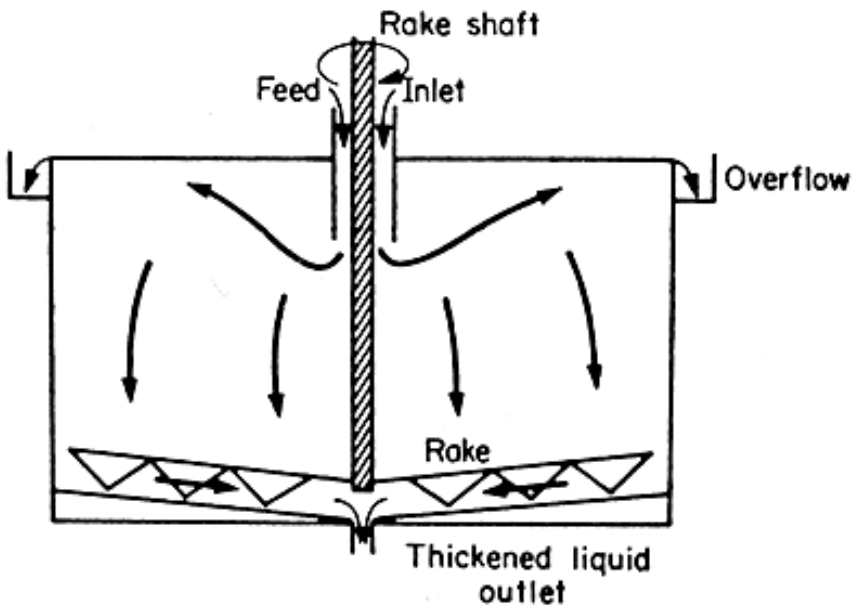

Figure 10.1 Continuous-sedimentation plant

Flotation

In some cases, where it is not practicable to settle out fine particles, these can sometimes be floated to the surface by the use of air bubbles. This technique is known as flotation and it depends upon the relative tendency of air and water to adhere to the particle surface. The water at the particle surface must be displaced by air, after which the buoyancy of the air is sufficient to carry both the particle and the air bubble up through the liquid.

Because it depends for its action upon surface forces, and surface forces can be greatly changed by the presence of even minute traces of surface active agents, flotation may be promoted by the use of suitable additives. In some instances, the air bubbles remain round the solid particles and cause froths. These are produced in vessels fitted with mechanical

agitators, the agitators whip up the air/liquid mixture and overflow the froth into collecting troughs.

The greatest application of froth flotation is in the concentration of minerals, but one use in the food industry is in the separation of small particles of fat from water. Dissolving the air in water under pressure provides the froth. On the pressure being suddenly released, the air comes out of solution in the form of fine bubbles which rise and carry the fat with them to surface scrapers.

Sedimentation of Particles in a Gas

In the food industry, an important application of sedimentation of solid particles occurs in spray dryers. In a spray dryer, the material to be dried is broken up into small droplets of about 100μm diameter and these fall through heated air, drying as they do so. The necessary area for the particles to settle can be calculated in the same way as for sedimentation. Two disadvantages arise from the slow rates of sedimentation: the large chamber areas required and also the long contact times between particles and the heated air which may lead to deterioration of heat sensitive products.

Settling Under Combined Forces

It is sometimes convenient to combine more than one force to effect a mechanical separation. In consequence of the low velocities, especially of very small particles, obtained when gravity is the only external force acting on the system, it is well worthwhile to also employ centrifugal forces. Probably the most common application of this is the cyclone separator. Combined forces are also used in some powder classifiers such as the rotary mechanical classifier and in ring dryers.

Cyclones

Cyclones are often used for the removal from air streams of particles of about 10μm or more in diameter. They are also used for separating particles from liquids and for separating liquid droplets from gases. The cyclone is a settling chamber in the form of a vertical cylinder, so arranged that the particle-laden air spirals round the cylinder to create centrifugal forces which throw the particles to the outside walls. Added to the gravitational forces, the centrifugal action provides reasonably rapid settlement rates. The spiral path, through the cyclone, provides sufficient separation time. A cyclone is illustrated in Fig. 10.2(a).

Stokes' Law shows that the terminal velocity of the particles is related to the force acting. In a centrifugal separator, such as a cyclone, for a particle rotating round the periphery of the cyclone:

$$F_c = (mv^2)/r \qquad (10.4)$$

where F_c is the centrifugal force acting on the particle, m is the mass of the particle, v is the tangential velocity of the particle and r is the radius of the cyclone.

This equation shows that the force on the particle increases as the radius decreases, for a fixed velocity. Thus, the most efficient cyclones for removing small particles are those of

smallest diameter. The limitations on the smallness of the diameter are both the capital costs of small diameter cyclones to provide sufficient output, and also the pressure drops.

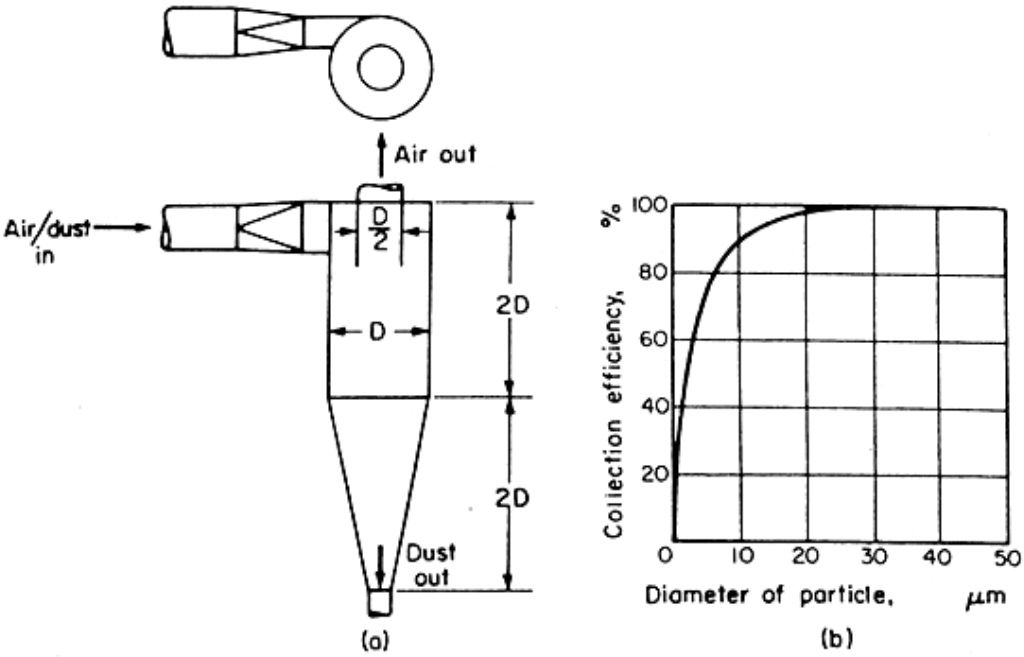

Figure 10.2 Cyclone separator: (a) equipment (b) efficiency of dust collection

The optimum shape for a cyclone has been evolved mainly from experience and proportions similar to those indicated in Fig. 10.2(a), have been found effective. The efficient operation of a cyclone depends very much on a smooth double helical flow being produced and anything which creates a flow disturbance or tends to make the flow depart from this pattern will have considerable and adverse effects upon efficiency. For example, it is important that the air enters tangentially at the top. Constricting baffles or lids should be avoided at the outlet for the air.

The efficiency of collection of dust in a cyclone is illustrated in Fig. 10.2(b). Because of the complex flow, the size cut of particles is not sharp and it can be seen that the percentage of entering particles which are retained in the cyclone falls off for particles below about 10μm diameter. Cyclones can be used for separating particles from liquids as well as from gases and also for separating liquid droplets from gases.

Impingement separators

Other mechanical flow separators for particles in a gas use the principal of impingement in which deflector plates or rods, normal to the direction of flow, abruptly change the direction of flow. The gas recovers its direction of motion more rapidly than the particles because of its lower inertia. Suitably placed collectors can then be arranged to collect the particles as they are thrown out of the stream. This is the principle of operation of mesh and fibrous air filters. Various adaptations of impingement and settling separators can be adapted to remove particles from gases, but where the particle diameters fall below about 5μm, cloth filters and packed tubular filters are about the only satisfactory equipment.

Classifiers

Classification implies the sorting of particulate material into size ranges. Use can be made of the different rates of movement of particles of different sizes and densities suspended in a fluid and differentially affected by imposed forces such as gravity and centrifugal fields, by making suitable arrangements to collect the different fractions as they move to different regions.

Rotary mechanical classifiers, combining differential settling with centrifugal action to augment the force of gravity and to channel the size fractions so that they can be collected, have come into increasing use in flour milling. One result of this is that because of small differences in sizes, shapes and densities between starch and protein-rich material after crushing, the flour can be classified into protein-rich and starch-rich fractions. Rotary mechanical classifiers can be used for other large particle separation in gases.

Classification is also employed in direct air dryers, in which use is made of the density decrease of material on drying. Dry material can be sorted out as a product and wet material returned for further drying. One such dryer uses a scroll casing through which the mixed material is passed, the wet particles pass to the outside of the casing and are recycled while the material in the centre is removed as dry product.

CENTRIFUGAL SEPARATIONS

The separation by sedimentation of two immiscible liquids, or of a liquid and a solid, depends on the effects of gravity on the components. Sometimes this separation may be very slow because the specific gravities of the components may not be very different, or because of forces holding the components in association, for example as occur in emulsions. Also, under circumstances when sedimentation does occur there may not be a clear demarcation between the components but rather a merging of the layers. For example, if whole milk is allowed to stand, the cream will rise to the top and there is eventually a clean separation between the cream and the skim milk. However, this takes a long time, of the order of one day, and so it is suitable, perhaps, for the farm kitchen but not for the factory. Much greater forces can be obtained by introducing centrifugal action, in a centrifuge. Gravity still acts and the net force is a combination of the centrifugal force with gravity as in the cyclone. Because in most industrial centrifuges, the centrifugal forces imposed are so much greater than gravity, the effects of gravity can usually be neglected in the analysis of the separation.

The centrifugal force on a particle that is constrained to rotate in a circular path is given by

$$F_c = mr\omega^2 \qquad (10.5)$$

where F_c is the centrifugal force acting on the particle to maintain it in the circular path, r is the radius of the path, m is the mass of the particle, and ω(omega) is the angular velocity of the particle.

Or, since $\omega = v/r$, where v is the tangential velocity of the particle

$$F_c = (mv^2)/r \qquad (10.6)$$

Rotational speeds are normally expressed in revolutions per minute, so that eqn. (10.6) can also be written, as $\omega = 2\pi N/60$; as it has to be in s^{-1}, divide by 60.

$$F_c = mr\,(2\pi N/60)^2 = 0.011\,mrN^2 \qquad (10.7)$$

where N is the rotational speed in revolutions per minute.

If this is compared with the force of gravity (F_g) on the particle, which is $F_g = mg$, it can be seen that the centrifugal acceleration, equal to $0.011rN^2$, has replaced the gravitational acceleration, equal to g. The centrifugal force is often expressed for comparative purposes as so many "g".

EXAMPLE 10.3. Centrifugal force in a centrifuge.
How many "g" can be obtained in a centrifuge which can spin a liquid at 2000 rev/min at a maximum radius of 10cm?

$$F_c = 0.011\,mrN^2$$
$$F_g = mg$$

$$F_c/F_g = (0.011rN^2)\,/\,g$$
$$= (0.011 \times 0.1 \times 2000^2)/9.81$$
$$= \underline{450g}$$

The centrifugal force depends upon the radius and speed of rotation and upon the mass of the particle. If the radius and the speed of rotation are fixed, then the controlling factor is the weight of the particle so that the heavier the particle the greater is the centrifugal force acting on it. Consequently, if two liquids, one of which is twice as dense as the other, are placed in a bowl and the bowl is rotated about a vertical axis at high speed, the centrifugal force per unit volume will be twice as great for the heavier liquid as for the lighter. The heavy liquid will therefore move to occupy the annulus at the periphery of the bowl and it will displace the lighter liquid towards the centre. This is the principle of the centrifugal liquid separator, illustrated diagrammatically in Fig. 10.3.

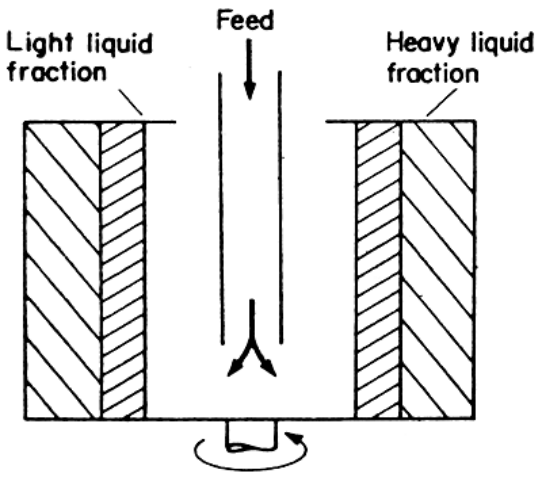

Figure 10.3 Liquid separation in a centrifuge

Rate of Separation

The steady-state velocity of particles moving in a streamline flow under the action of an accelerating force is, from eqn. (10.1),

$$v_m = D^2 a\,(\rho_p - \rho_f)\,/18\mu$$

If a streamline flow occurs in a centrifuge we can write, from eqns. (10.6) and (10.7), as a is the tangential acceleration:

$$F_c = ma$$
$$F_c/m = a = r\,(2\pi N/60)^2$$

so that

$$v_m = D^2\, r(2\pi N/60)^2(\rho_p - \rho_f)\,/18\mu$$

$$v_m = D^2 N^2 r\,(\rho_p - \rho_f)/1640\mu \qquad (10.8)$$

EXAMPLE 10.4. Centrifugal separation of oil in water
A dispersion of oil in water is to be separated using a centrifuge. Assume that the oil is dispersed in the form of spherical globules 5.1 x 10^{-5} m diameter; its density is 894 kgm^{-3}. If the centrifuge rotates at 1500 rev/mm and the effective radius at which the separation occurs is 3.8cm, calculate the velocity of the oil through the water. Take the density of water to be 1000kgm^{-3} and its viscosity to be 0.7 x $10^{-3}Nsm^{-2}$. (The separation in this problem is the same as that in Example 10.2, in which the rate of settling under gravity was calculated.)

From eqn. (10.8)

$$v_m = (5.1 \times 10^{-5})^2 \times (1500)^2 \times 0.038 \times (1000 - 894)/(1.64 \times 10^3 \times 0.7 \times 10^{-3})$$
$$= \underline{0.02ms^{-1}}$$

Checking that it is reasonable to assume Stokes' Law

$$Re = (Dv\rho/\mu)$$
$$= (5.1 \times 10^{-5} \times 0.02 \times 1000)/(0.7 \times 10^{-3})$$
$$= \underline{1.5}$$

so that the flow is streamline and it should obey Stokes' Law.

Liquid Separation

The separation of one component of a liquid/liquid mixture, where the liquids are immiscible but finely dispersed, as in an emulsion, is a common operation in the food industry. It is particularly common in the dairy industry in which the emulsion, milk, is separated by a centrifuge into skim milk and cream. It seems worthwhile, on this account, to examine the position of the two phases in the centrifuge as it operates. The milk is fed continuously into the machine, which is generally a bowl rotating about a vertical axis, and cream and skim milk come from the respective discharges. At some point within the bowl there must be a surface of separation between cream and the skim milk.

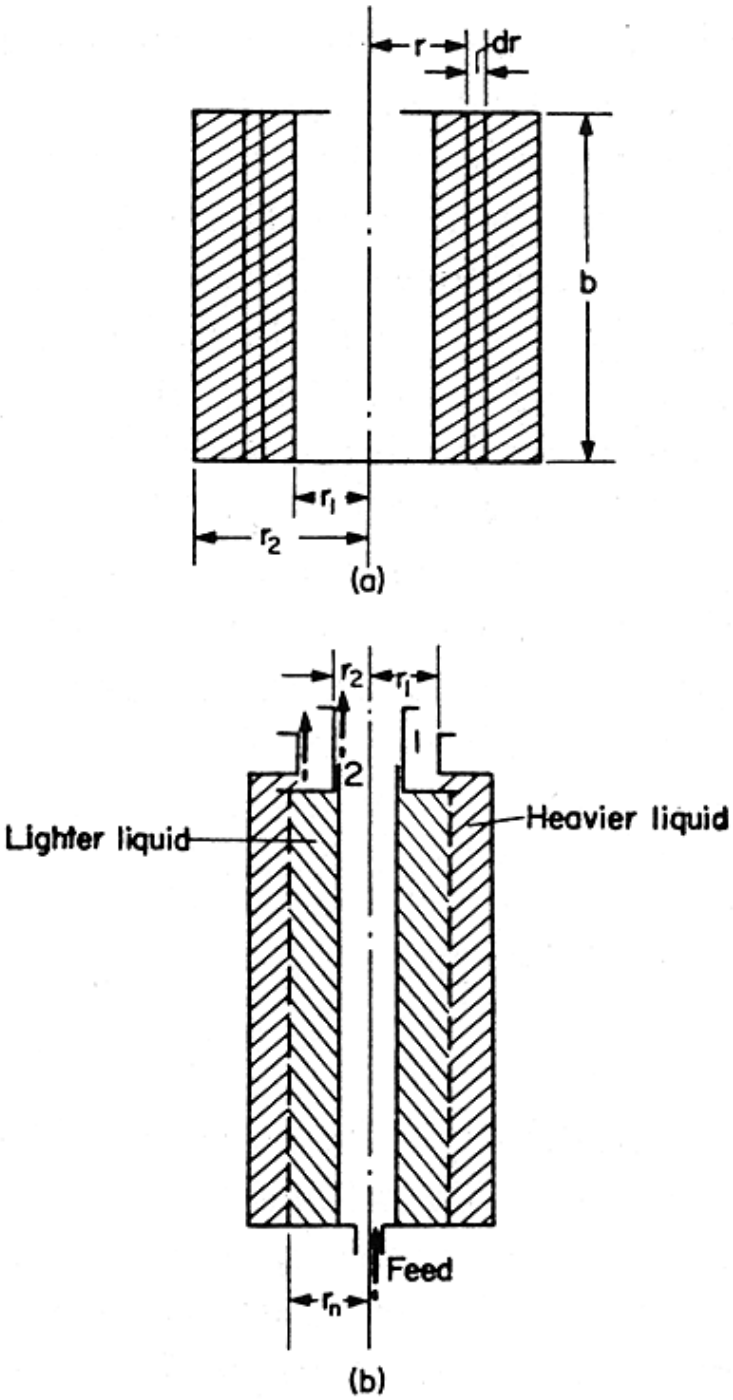

Figure10.4 Centrifuging liquids (a) thin cylinder of liquid (b) continuous liquid centrifuge

Consider a thin cylinder, of thickness d*r* and height *b* as shown in Fig. 10.4(a): the differential centrifugal force across the thickness d*r* is given by eqn. 10.5:

$$dF_c = (dm)r\omega^2$$

where dF_c is the differential force across the cylinder wall, d*m* is the mass of the differential cylinder, ω is the angular velocity of the cylinder and *r* is the radius of the cylinder. But,

$$dm = 2\pi rb\rho dr$$

where ρ is the density of the liquid and *b* is the height of the cylinder.

Therefore $$dF_c = (2\pi rb\rho dr)r\omega^2$$

The area over which the force dF_c acts is $2\pi rb$, so that:

$$dP = dF_c / 2\pi rb = \rho\omega^2 r dr$$

where d*P* is the differential pressure across the wall of the differential cylinder.

To find the differential pressure in a centrifuge, between radius r_1 and r_2, the equation for d*P* can be integrated, letting the pressure at radius r_1 be $P_1$and that at r_2 be P_2, and so

$$P_2 - P_1 = \rho\omega^2 (r_2^2 - r_1^2)/2 \qquad (10.9)$$

Equation (10.9) shows the radial variation in pressure across the centrifuge.

Consider now Fig. 10.4(b), which represents the bowl of a vertical continuous liquid centrifuge. The feed enters the centrifuge near to the axis, the heavier liquid, *A*, discharges through the top opening 1 and the lighter liquid, *B*, through the opening 2. Let r_1 be the radius at the discharge pipe for the heavier liquid and r_2 that for the lighter liquid. At some other radius r_n, there will be a separation between the two phases, the heavier and the lighter. For the system to be in hydrostatic balance, the pressures of each component at radius r_n must be equal, so that applying eqn. (10.9) to find the pressures of each component at radius r_n, and equating these we have:

$$\rho_A\omega^2 (r_n^2 - r_1^2)/2 = \rho_B\omega^2(r_n^2 - r_2^2)/2$$
$$\rho_A(r_n^2 - r_1^2) = \rho_B(r_n^2 - r_2^2)$$

$$r_n^2 = (\rho_A r_1^2 - \rho_B r_2^2)/ (\rho_A - \rho_B) \qquad (10.10)$$

where ρ_A is the density of the heavier liquid and ρ_B is the density of the lighter liquid.

Equation (10.10) shows that as the discharge radius for the heavier liquid is made smaller, then the radius of the neutral zone must also decrease. When the neutral zone is nearer to the central axis, the lighter component is exposed only to a relatively small centrifugal force compared with the heavier liquid. This is applied where, as in the separation of cream from milk, as much cream as possible is to be removed and the neutral radius is therefore kept small. The feed to a centrifuge of this type should be as nearly as possible into the neutral zone so that it will enter with the least disturbance of the system. This relationship can, therefore, be used to place the feed inlet and the product outlets in the centrifuge to get maximum separation.

EXAMPLE 10.5. Centrifugal separation of milk and cream
If a cream separator has discharge radii of 5 cm and 7.5 cm and if the density of skim milk is 1032kgm^{-3} and that of cream is 915 kgm^{-3}, calculate the radius of the neutral zone so that the feed inlet can be designed.

For skim milk, r_1 = 0.075m, ρ_A = 1032 kgm^{-3}; for cream r_2 = 0.05m, ρ_B = 915 kgm^{-3}

From eqn. (10.10)

$$r_n^2 = [1032 \times (0.075)^2 - 915 \times (0.05)^2] / (1032 - 915)$$
$$= 0.03\text{m}^2$$
$$r_n = 0.17 \text{ m}$$
$$= \underline{17\text{cm}}$$

Centrifuge Equipment

The simplest form of centrifuge consists of a bowl spinning about a vertical axis, as shown in Fig. 10.4(a). Liquids, or liquids and solids, are introduced into this and under centrifugal force the heavier liquid or particles pass to the outermost regions of the bowl, whilst the lighter components move towards the centre.

If the feed is all liquid, then suitable collection pipes can be arranged to allow separation of the heavier and the lighter components. Various arrangements are used to accomplish this collection effectively and with a minimum of disturbance to the flow pattern in the machine. To understand the function of these collection arrangements, it is very often helpful to think of the centrifuge action as analogous to gravity settling, with the various weirs and overflows acting in just the same way as in a settling tank even though the centrifugal forces are very much greater than gravity.

In liquid/liquid separation centrifuges, conical plates are arranged as illustrated in Fig. 10.5(a) and these give smoother flow and better separation.

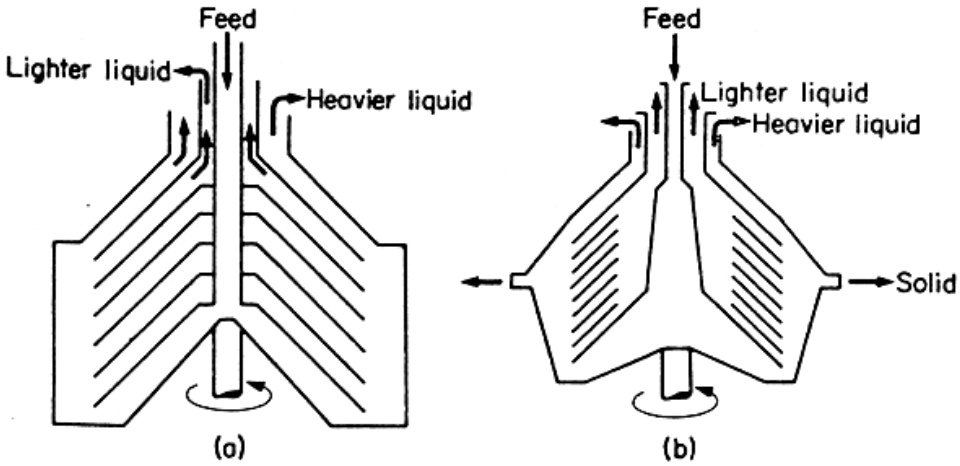

Figure 10.5 Liquid centrifuges: (a) conical bowl, (b) nozzle

Whereas liquid phases can easily be removed from a centrifuge, solids present much more of a problem. In liquid/solid separation, stationary ploughs cannot be used as these create too much disturbance of the flow pattern on which the centrifuge depends for its separation. One method of handling solids is to provide nozzles on the circumference of the centrifuge bowl as illustrated in Fig.10.5(b). These nozzles may be opened at intervals to discharge

accumulated solids together with some of the heavy liquid. Alternatively, the nozzles may be open continuously relying on their size and position to discharge the solids with as little as possible of the heavier liquid. These machines thus separate the feed into three streams, light liquid, heavy liquid and solids, the solids carrying with them some of the heavy liquid as well. Another method of handling solids from continuous feed is to employ telescoping action in the bowl, sections of the bowl moving over one another and conveying the solids that have accumulated towards the outlet, as illustrated in Fig. 10.6(a)

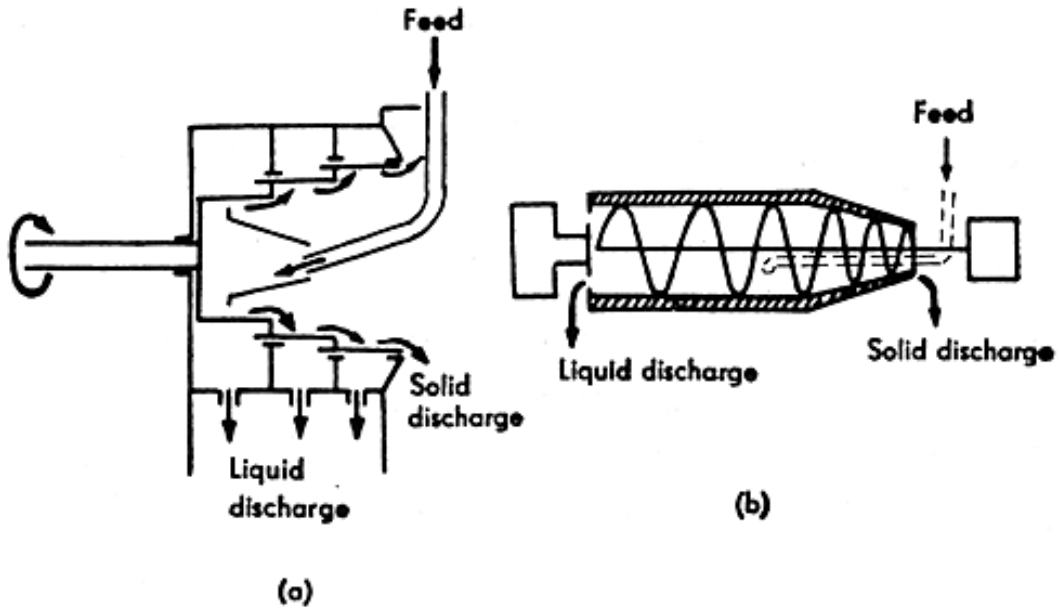

Figure 10.6 Liquid/solid centrifuges(a) telescoping bowl(b) horizontal bowl, scroll discharge

The horizontal bowl centrifuge with scroll discharge, as illustrated in Fig.10.6(b) can discharge continuously. In this machine, the horizontal collection scroll (or screw) rotates inside the conical-ended bowl of the machine and conveys the solids with it, whilst the liquid discharges over an overflow towards the centre of the machine and at the opposite end to the solid discharge. The essential feature of these machines is that the speed of the scroll, relative to the bowl, must not be great. For example, if the bowl speed is 2000rev/min, a suitable speed for the scroll might be 25rev/min relative to the bowl, which would mean a scroll speed of 2025 or 1975rev/min. The differential speeds are maintained by gearing between the driving shafts for the bowl and the scroll. These machines can continuously handle feeds with solid contents of up to 30%. A discussion of the action of centrifuges is given by Trowbridge (1962) and they are also treated in McCabe and Smith (1975) and Coulson and Richardson (1977).

FILTRATION

In another class of mechanical separations, placing a screen in the flow through which they cannot pass imposes virtually total restraint on the particles above a given size. The fluid in this case is subject to a force that moves it past the retained particles. This is called filtration. The particles suspended in the fluid, which will not pass through the apertures, are retained

and build up into what is called a filter cake. Sometimes it is the fluid, the filtrate, that is the product, in other cases the filter cake.

The fine apertures necessary for filtration are provided by fabric filter cloths, by meshes and screens of plastics or metals, or by beds of solid particles. In some cases, a thin preliminary coat of cake, or of other fine particles, is put on the cloth prior to the main filtration process. This preliminary coating is put on in order to have sufficiently fine pores on the filter and it is known as a pre-coat.

The analysis of filtration is largely a question of studying the flow system. The fluid passes through the filter medium, which offers resistance to its passage, under the influence of a force which is the pressure differential across the filter. Thus, we can write the familiar equation:

rate of filtration = driving force/resistance

Resistance arises from the filter cloth, mesh, or bed, and to this is added the **resistance of the filter cake** as it accumulates. The filter-cake resistance is obtained by multiplying the specific resistance of the filter cake, that is its resistance per unit thickness, by the thickness of the cake. The resistances of the filter material and pre-coat are combined into a single resistance called the filter resistance. It is convenient to express the filter resistance in terms of a fictitious thickness of filter cake. This thickness is multiplied by the specific resistance of the filter cake to give the filter resistance. Thus the overall equation giving the **volumetric rate of flow** d V/dt is:

$$\mathrm{d}V/\mathrm{d}t = (A\,\Delta P)/\,R$$

As the total resistance is proportional to the viscosity of the fluid, we can write:

$$R = \mu r(L_c + L)$$

where R is the resistance to flow through the filter, μ is the viscosity of the fluid, r is the specific resistance of the filter cake, L_c is the thickness of the filter cake and L is the fictitious equivalent thickness of the filter cloth and pre-coat, A is the filter area, and ΔP is the pressure drop across the filter.

If the rate of flow of the liquid and its solid content are known and assuming that all solids are retained on the filter, the thickness of the filter cake can be expressed by:

$$L_c = wV/A$$

where w is the fractional solid content per unit volume of liquid, V is the volume of fluid that has passed through the filter and A is the area of filter surface on which the cake forms.

The resistance can then be written

$$R = \mu r\,[\mathrm{w}(V/A) + L] \qquad (10.11)$$

and the equation for flow through the filter, under the driving force of the pressure drop is then:

$$dV/dt = A\,\Delta P/\,\mu r[w(V/A) + L] \qquad (10.12)$$

Equation (10.12) may be regarded as the fundamental equation for filtration. It expresses the rate of filtration in terms of quantities that can be measured, found from tables, or in some cases estimated. It can be used to predict the performance of large-scale filters on the basis of laboratory or pilot scale tests. Two applications of eqn. (10.12) are filtration at a constant flow rate and filtration under constant pressure.

Constant Rate Filtration

In the early stages of a filtration cycle, it frequently happens that the filter resistance is large relative to the resistance of the filter cake because the cake is thin. Under these circumstances, the resistance offered to the flow is virtually constant and so filtration proceeds at a more or less constant rate. Equation (10.12) can then be integrated to give the quantity of liquid passed through the filter in a given time. The terms on the right-hand side of eqn.(10.12) are constant so that integration is very simple:

$$\int dV/A\,dt = V/At = \Delta P/[\mu r w(V/A) + L]$$

or

$$\Delta P = V/At \times \mu r[(wV/A) + L] \qquad (10.13)$$

From eqn. (10.13) the pressure drop required for any desired flow rate can be found. Also, if a series of runs is carried out under different pressures, the results can be used to determine the resistance of the filter cake.

Constant Pressure Filtration

Once the initial cake has been built up, and this is true of the greater part of many practical filtration operations, flow occurs under a constant-pressure differential. Under these conditions, the term ΔP in eqn. (10.12) is constant and so

$$\mu r[w(V/A) + L]dV = A\,\Delta P dt$$

and integration from $V = 0$ at $t = 0$, to $V = V$ at $t = t$

$$\mu r[w(V^2/2A) + LV] = A\,\Delta P t \text{ and rewriting this}$$

$$tA/V = (\mu r w/2\Delta P) \times (V/A) + \mu r L/\Delta P \qquad (10.14)$$

$$t/(V/A) = (\mu r w/2\Delta P) \times (V/A) + \mu r L/\Delta P$$

Equation (10.14) is useful because it covers a situation that is frequently found in a practical filtration plant. It can be used to predict the performance of filtration plant on the basis of experimental results. If a test is carried out using constant pressure, collecting and measuring the filtrate at measured time intervals, a **filtration graph** can be plotted of $t/(V/A)$ against (V/A) and from the statement of eqn. (10.14) it can be seen that this graph should be a straight

line. The slope of this line will correspond to $\mu rw/2\Delta P$; the intercept on the $t/(V/A)$ axis will give the value of $\mu rL/\Delta P$. Since, in general, μ, w, ΔP and A are known or can be measured, the values of the slope and intercept on this graph enable L and r to be calculated.

EXAMPLE 10.6. Volume of filtrate from a filter press

A filtration test was carried out, with a particular product slurry, on a laboratory filter press under a constant pressure of 340 kPa and volumes of filtrate were collected as follows:

Filtrate volume (kg)	20	40	60	80
Time (min)	8	26	54.5	93

The area of the laboratory filter was 0.186 m^2. In a plant scale filter, it is desired to filter a slurry containing the same material, but at 50% greater concentration than that used for the test, and under a pressure of 270kPa. Estimate the quantity of filtrate that would pass through in 1 hour if the area of the filter is 9.3m^2.

From the experimental data:

V(kg)	20	40	60	80
t(s)	480	1560	3270	5580
V/A (l/m^2)	107.5	215	323	430
$t/(V/A)$ ($sm^2\,kg^{-1}$)	4.47	7.26	10.12	12.98

These values of $t/(V/A)$ are plotted against the corresponding values of V/A in Fig. 10.7. From the graph, we find that the slope of the line is 0.0265, and the intercept 1.6.

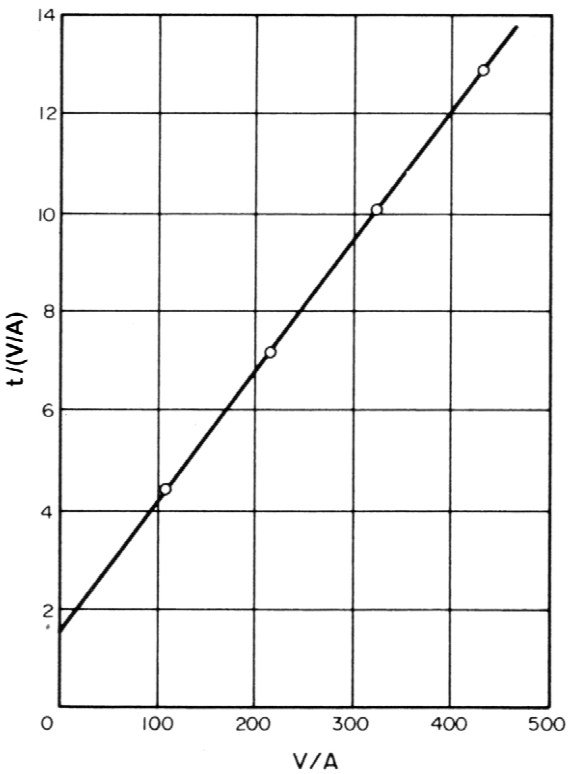

Figure 10.7 Filtration Graph

Then substituting in eqn. (10.14) we have

$$t/(V/A) = 0.0265(V/A) + 1.6.$$

To fit the desired conditions for the plant filter, the constants in this equation will have to be modified. If all of the factors in eqn. (10.14) except those which are varied in the problem are combined into constants, K and K', we can write

$$t/(V/A) = (w/\Delta P)K \times (V/A) + K'/\Delta P \qquad \text{(a)}$$

In the laboratory experiment $w = w_1$, and $\Delta P = \Delta P_1$

$$K = (0.0265\Delta P_1 / w_1) \text{ and } K' = 1.6\Delta P_1$$

For the new plant condition, $w = w_2$ and $P = P_2$, so that, substituting in the eqn.(a) above, we then have for the plant filter, under the given conditions:

$$t/(V/A) = (0.0265\ \Delta P_1/w_1)(w_2/\Delta P_2)(V/A) + (1.6\Delta P_1)(1/\Delta P_2)$$

and since from these conditions

$$\Delta P_1/\Delta P_2 = 340/270$$

and $$w_2/w_1 = 150/100,$$

$$t/(V/A) = 0.0265(340/270)(150/100)(V/A) + 1.6(340/270)$$
$$= 0.05(V/A) + 2.0$$
$$t = 0.5(V/A)^2 + 2.0(V/A).$$

To find the volume that passes the filter in 1 h which is 3600s, that is to find V for $t = 3600$.

$$3600 = 0.05(V/A)^2 + 2.0(V/A)$$

and solving this quadratic equation, we find that $V/A = 250\text{kgm}^{-2}$

and so the slurry passing through 9.3 m^2 in 1 h would be:

$$= 250 \times 9.3$$
$$= \underline{2325\text{kg}}.$$

Filter-cake Compressibility

With some filter cakes, the specific resistance varies with the pressure drop across it. This is because the cake becomes denser under the higher pressure and so provides fewer and smaller passages for flow. The effect is spoken of as the compressibility of the cake. Soft and flocculent materials provide highly compressible filter cakes, whereas hard granular materials, such as sugar and salt crystals, are little affected by pressure. To allow for cake compressibility the empirical relationship has been proposed:

$$r = r'\Delta(P)^s$$

where r is the specific resistance of the cake under pressure P, ΔP is the pressure drop across the filter, r' is the specific resistance of the cake under a pressure drop of 1atm and s is a constant for the material, called its compressibility.

This expression for r can be inserted into the filtration equations, such as eqn. (10.14), and values for r' and s can be determined by carrying out experimental runs under various pressures.

Filtration Equipment

The basic requirements for filtration equipment are:

- mechanical support for the filter medium,
- flow accesses to and from the filter medium and
- provision for removing excess filter cake.

In some instances, washing of the filter cake to remove traces of the solution may be necessary. Pressure can be provided on the upstream side of the filter, or a vacuum can be drawn downstream, or both can be used to drive the wash fluid through.

Plate and frame filter press

In the plate and frame filter press, a cloth or mesh is spread out over plates which support the cloth along ridges but at the same time leave a free area, as large as possible, below the cloth for flow of the filtrate. This is illustrated in Fig. 10.8(a). The plates with their filter cloths may be horizontal, but they are more usually hung vertically with a number of plates operated in parallel to give sufficient area.

Filter cake builds up on the upstream side of the cloth, that is the side away from the plate. In the early stages of the filtration cycle, the pressure drop across the cloth is small and filtration proceeds at more or less a constant rate. As the cake increases, the process becomes more and more a constant pressure one and this is the case throughout most of the cycle. When the available space between successive frames is filled with cake, the press has to be dismantled and the cake scraped off and cleaned, after which a further cycle can be initiated.

The plate and frame filter press is cheap but it is difficult to mechanize to any great extent. Variants of the plate and frame press have been developed which allow easier discharging of the filter cake. For example, the plates, which may be rectangular or circular, are supported on a central hollow shaft for the filtrate and the whole assembly enclosed in a pressure tank containing the slurry.

Filtration can be done under pressure or vacuum. The advantage of vacuum filtration is that the pressure drop can be maintained whilst the cake is still under atmospheric pressure and so can be removed easily. The disadvantages are the greater costs of maintaining a given pressure drop by applying a vacuum and the limitation on the vacuum to about 80kPa maximum. In pressure filtration, the pressure driving force is limited only by the economics of attaining the pressure and by the mechanical strength of the equipment.

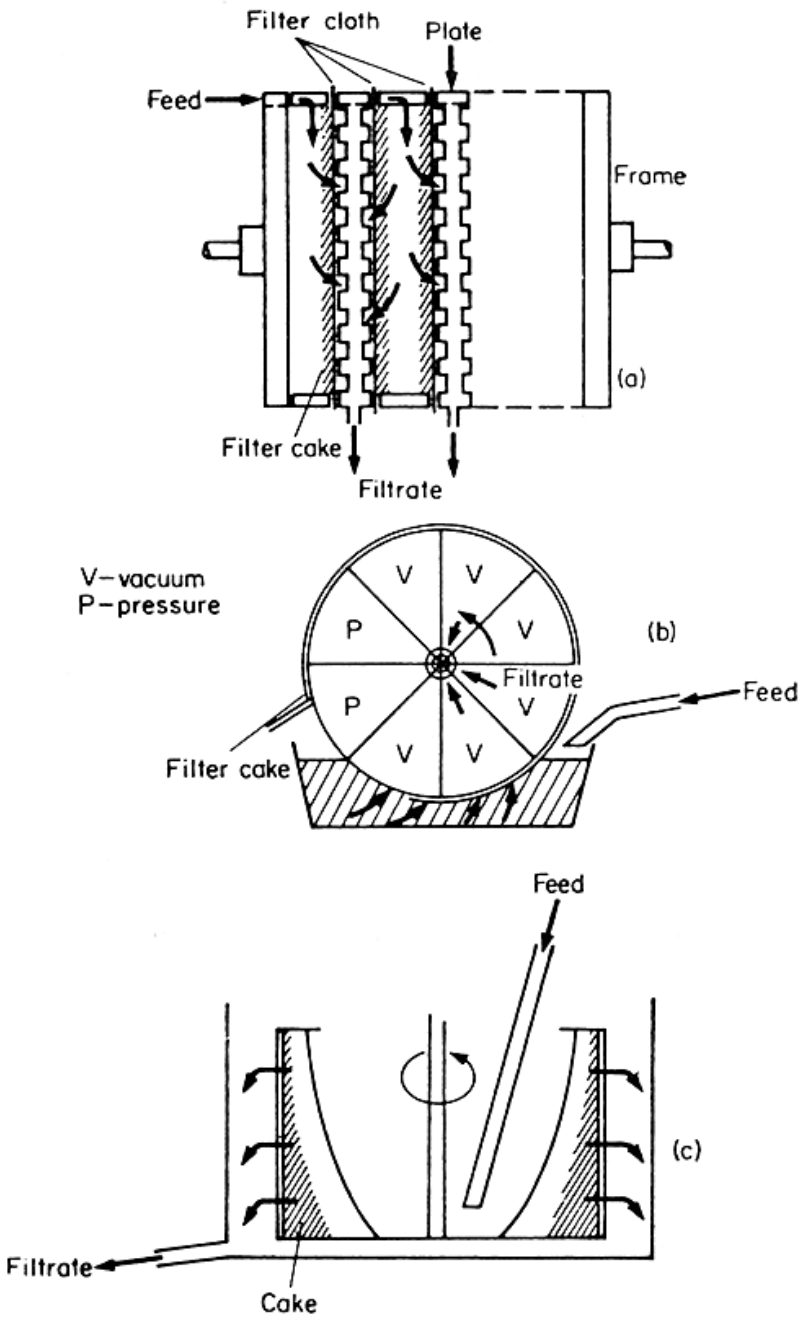

Figure 10.8 Filtration equipment: (a) plate and frame press (b) rotary vacuum filter (c) centrifugal filter

Rotary filters

In rotary filters, the flow passes through a rotating cylindrical cloth from which the filter cake can be continuously scraped. Either pressure or vacuum can provide the driving force, but a particularly useful form is the rotary vacuum filter. In this, the cloth is supported on the periphery of a horizontal cylindrical drum that dips into a bath of the slurry. Vacuum is drawn in those segments of the drum surface on which the cake is building up. A suitable bearing applies the vacuum at the stage where the actual filtration commences and breaks the vacuum at the stage where the cake is being scraped off after filtration. Filtrate is removed

through trunnion bearings. Rotary vacuum filters are expensive, but they do provide a considerable degree of mechanization and convenience. A rotary vacuum filter is illustrated diagrammatically in Fig. 10.8(b).

Centrifugal filters

Centrifugal force is used to provide the driving force in some filters. These machines are really centrifuges fitted with a perforated bowl that may also have filter cloth on it. Liquid is fed into the interior of the bowl and under the centrifugal forces, it passes out through the filter material. This is illustrated in Fig. 10.8(c).

Air filters

Filters are used quite extensively to remove suspended dust or particles from air streams. The air or gas moves through a fabric and the dust is left behind. These filters are particularly useful for the removal of fine particles. One type of bag filter consists of a number of vertical cylindrical cloth bags 15-30cm in diameter, the air passing through the bags in parallel. Air bearing the dust enters the bags, usually at the bottom and the air passes out through the cloth. A familiar example of a bag filter for dust is to be found in the domestic vacuum cleaner. Some designs of bag filters provide for the mechanical removal of the accumulated dust. For removal of particles less than 5μm diameter in modern air sterilization units, paper filters and packed tubular filters are used. These cover the range of sizes of bacterial cells and spores.

SIEVING

In the final separation operation in this group, restraint is imposed on some of the particles by mechanical screens that prevent their passage. This is done successively, using increasingly smaller screens, to give a series of particles classified into size ranges. The fluid, usually air, can effectively be ignored in this operation which is called sieving. The material is shaken or agitated above a mesh or cloth screen; particles of smaller size than the mesh openings can pass through under the force of gravity. Rates of throughput of sieves are dependent upon a number of factors:

- nature and shape of the particles,
- frequency and amplitude of the shaking,
- methods used to prevent sticking or bridging of particles in the apertures of the sieve and
- tension and physical nature of the sieve material.

Standard sieve sizes have evolved, covering a range from 25mm aperture down to about 0.6mm aperture. The mesh was originally the number of apertures per inch. A logical base for a sieve series would be that each sieve size have some fixed relation to the next larger and to the next smaller. A convenient ratio is 2:1 and this has been chosen for the standard series of sieves in use in the United States, the Tyler sieve series. The mesh numbers are expressed in terms of the numbers of opening to the inch (= 2.54 cm). By suitable choice of sizes for the wire from which the sieves are woven, the ratio of opening sizes has been kept approximately constant in moving from one sieve to the next. Actually, the ratio of 2:1 is rather large so that the normal series progresses in the ratio of $\sqrt{2}$:1 and if still closer ratios are required

intermediate sieves are available to make the ratio between adjacent sieves in the complete set $\sqrt[4]{2}$: 1. The standard British series of sieves has been based on the available standard wire sizes, so that, although apertures are generally of the same order as the Tyler series, aperture ratios are not constant. In the SI system, apertures are measured in mm. A table of sieve sizes has been included in Appendix 10.

In order to get reproducible results in accurate sieving work, it is necessary to standardize the procedure. The analysis reports either the percentage of material that is retained on each sieve, or the cumulative percentage of the material larger than a given sieve size.

The results of a sieve analysis can be presented in various forms, perhaps the best being the cumulative analysis giving, as a function of the sieve aperture (D), the weight fraction of the powder $F(D)$ which passes through that and larger sieves, irrespective of what happens on the smaller ones. That is the cumulative fraction sums all particles smaller than the particular sieve of interest.

Thus $F = F(D)$,

$$dF/dD = F'(D)$$

where $F'(D)$ is the derivative of $F(D)$ with respect to D.

So $$\int dF = \int F'(D)\, dD \qquad (10.15)$$

and so integrating between D_1 and D_2 gives the cumulative fraction between two sizes D_2 (larger) and D_1 which is also that fraction passing through sieve of aperture D_2 and caught on that of aperture D_1. The $F'(D)$ graph gives a **particle size distribution analysis**.

EXAMPLE 10.7. Sieve analysis
Given the following sieve analysis:

Sieve size mm	% Retained
1.00	0
0.50	11
0.25	49
0.125	28
0.063	8
Through 0.063	4

plot a cumulative sieve analysis and estimate the weight fraction of particles of sizes between 0.300 and 0.350 mm and 0.350 and 0.400 mm.

From the above table:

Less than aperture	(mm)	0.063	0.125	0.250	0.500	1.00
	(μm)	63	125	250	500	1000
Percentage (cumulative)		4	12	40	89	100

This has been plotted on Fig. 10.9 and the graph $F(D)$ has been smoothed. From this the graph of $F'(D)$ has been plotted, working from the slope of $F(D)$, to give the particle size distribution.

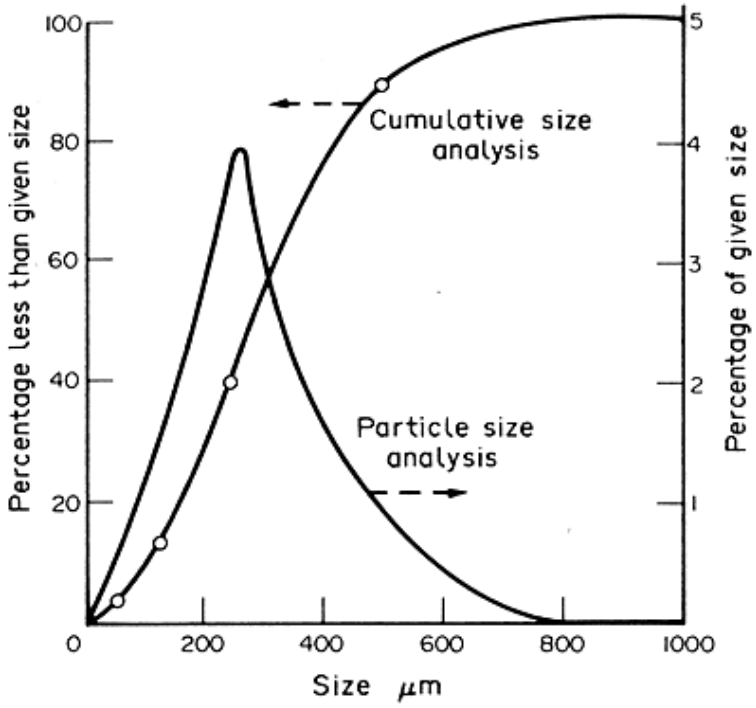

Figure 10.9 Particle-size analysis

To find the fraction between the specified sizes, eqn. (10.15) indicates that this will be given directly by the fraction, that the area under the *F'*(*D*) graph and between the sizes of interest, is to the total area under the *F'(D)* curve. Counting squares, on Fig. 10.9, gives:

between 300μm (0.300 mm) and 350μm (0.350mm) as 13%
and 350μm (0.350mm) and 400μm (0.400mm) as 9%.

For industrial sieving, it is seldom worthwhile to continue until equilibrium is reached. In effect, a sieving efficiency term is introduced, as a proportion only of the particles smaller than a given size actually get through. The sieves of a series are often mounted one above the other, and a mechanical shaker used.

Sieve analysis for particle size determination should be treated with some caution especially for particles deviating radically from spherical shape, and it needs to be supplemented with microscopical examination of the powders. The size distribution of powders can be useful to estimate parameters of technological importance such as the surface area available for a reaction, the ease of dispersion in water of a dried milk powder, or the performance characteristics of a spray dryer or a separating cyclone.

Industrial sieves include rotary screens, which are horizontal cylinders either perforated or covered with a screen, into which the material is fed. The smaller particles pass through as they tumble around in the rotating screens. Other industrial sieves are vibrating screens, generally vibrated by an eccentric weight; and multi-deck screens on which the particles fall through from one screen to another, of decreasing apertures, until they reach one which is too fine for them to pass. With vibrating screens, the frequency and amplitude of the vibrations can significantly affect the separation achieved. Screen capacities are usually rated in terms

of the quantity passed through per unit area in unit time. Particles that can conveniently be screened industrially range from 50μm diameter, upwards.

Continuous vibrating sieves used in the flour-milling industry employ a sieve of increasing apertures as particles progress along the length of the screen. So the finer fraction at any stage is being removed as the flour particles move along. The shaking action of the sieve provides the necessary motion to make the particles fall through and also conveys the oversize particles on to the next section. Below the sieves, in some cases, air classification may be used to remove bran.

SUMMARY

1. Particles can be separated from fluids, or particles of different sizes from each other, making use of forces that have different effects depending on particle size.

2. Flow forces in fluids give rise to velocities of particles relative to the fluid of:

$$v_m = D^2 a\ (\rho_p - \rho_f)\ /18\mu$$

Where the particle is falling under gravity a = g, so giving Stokes' Law

$$v_m = D^2 g(\rho_p - \rho_f)/18\mu$$

3. Continuous thickeners can be used to settle out solids, and the minimum area of a continuous thickener can be calculated from:

$$v = (F - L)(dw/dt)/A\rho$$

4. Gravitational and centrifugal forces can be combined in a cyclone separator.

$$F_c = (mv^2)/r$$

5. In a centrifuge, the force relative to the force of gravity is given by $(0.011rN^2)/g$ and the steady state velocity:

$$v_m = D^2 N^2 r\ (\rho_p - \rho_f)/l640\mu$$

6. In centrifugal separation of liquids, the radius of the neutral zone:

$$r_n^2 = (\rho_A r_1{}^2 - \rho_B r_2{}^2)/\ (\rho_A - \rho_B)$$

7. In a filter, the particles are retained and the fluid passes at a rate given by:

$$dV/dt = A\Delta P/\mu r[w(V/A) + L]$$

8. Sieve analysis can be used to estimate particle size distributions. In cumulative sieve analysis:

$$\int dF = \int F''(D)\ dD$$

integrating between D_1 and D_2

PROBLEMS

1. A test was carried out on a wine filter. It was found that under a constant pressure difference of 350kPa gauge, the rate of flow was 450kg h^{-1} from a total filter area of

$0.82m^2$. Assuming that the quantity of cake is insignificant in changing the resistance of the filter, if another filter of 6.5 m^2 area is added, what pressure would be required for a throughput of 500 hectolitres per 8-hour shift from the combined plant? Firstly determine *R*, the resistance, and then the pressure difference. Assume density of wine is $1000kgm^3$.

2. A wine clarifying filter, on checking, is found to pass 500 l/h under a pressure differential of 220 kPa. If 1200 l of wine with twice the degree of cloudiness has to be passed through the filter how long would you expect this to take? If you wished to complete this filtration in a 1 hour cycle, calculate the pressure you would need to apply.

3. Calculate the settling velocity of sand particles 0.2mm diameter in 22% salt solution of density $1240kgm^{-3}$ at 20ºC. Take the density of sand as $2010kgm^{-3}$.

4. In a trough, 0.8 m long, there is a slowly ($0.01ms^{-1}$) flowing 22% salt solution. If it was desired to settle out sand particles, with which the solution had become contaminated, estimate the smallest diameter of sand particle that would be removed.

5. It is desired to establish a centrifugal force of 6000g in a small centrifuge with an effective working radius of 9cm. At what speed would the centrifuge have to rotate?

   If the actual centrifuge bowl has a radius of 8cm minimum and 9 cm maximum what is the difference in the centrifugal force between the minimum and the maximum radii?

6. In a centrifuge separating oil (of density $900kg\ m^{-3}$) from brine (of density $1070kg\ m^{-3}$), the discharge radius for the oil is 5cm. Calculate a suitable radius for the brine discharge and for the feed intake so that the machine will work smoothly assuming that the volumes of oil and of brine are approximately equal.

7. If a centrifuge is regarded as similar to a gravity settler but with gravity replaced by the centrifugal field, calculate the area of a centrifuge of working radius *r* and speed of rotation *N* revolutions min^{-1} that would have the same throughput as a gravity settling tank of area $100m^2$.

8. If an olive oil/water emulsion of 5μm droplets is to be separated in a centrifuge into oil and water, what speed (revs min^{-1}) would be necessary if the effective working radius of the centrifuge is 5cm? Assume that the necessary travel of the droplets is 3 cm and this must be done in 1 second to cope with the throughput in a continuous centrifuge.

9. A sieve analysis gives the following results:

Sieve size mm	Wt. retained g
1.00	0
0.500	64
0.250	324
0.125	240
0.063	48
Through 0.063	24

Plot a cumulative size analysis and a size-distribution analysis, and estimate the weights, per 1000kg of powder, which would lie in the size ranges 0.150 to 0.200 mm and 0.250 to 0.350 mm.

11. If a dust, whose particle size distribution is as in the table below, is passed through a cyclone with collection efficiency as shown in Fig. 10.2 estimate the size distribution of the dust passing out.

Particle diameter	<0.5μm	3μm	6μm	l0μm	l5μm	25μm
Wt. of particles kg	0.2	0.7	0.4	0.2	0.1	0